All-Metal Gate Valve

manual actuator

This manual is valid for the valve ordering numbers:

48136- . E01/05/08
48140- . E01/05/08
48144- . E01/05/08
48146- . E01/05/08

The respective product identification is given on each valve in the following way (or similar):

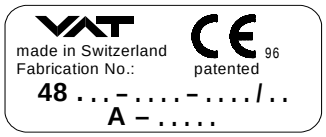

Read these **«Installation, Operating and Maintenance Instructions»** and the enclosed **«General Safety Instructions»** carefully before you start any other action.

Explanation of symbols:

- Read declaration carefully before you start any other action!
- Attention!
- Product is in conformity with EC guidelines, if applicable!
- Disconnect electrical power and compressed air lines. Do not touch parts under voltage!
- Keep body parts and objects away from the valve opening!
- Hot surfaces; do not touch!
- Loaded springs and/or air cushions are potential hazards!
- Wear gloves!

Imprint:

Manufacturer VAT Vakuumventile AG, CH-9469 Haag, Switzerland

Website	Phone	Fax	Email
www.vatvalve.com	+41 81 771 61 61	+41 81 771 48 30	CH@vatvalve.com

Publisher VAT Vakuumventile AG, CH-9469 Haag, Switzerland

Editor VAT Vakuumventile AG, CH-9469 Haag, Switzerland

Print VAT Vakuumventile AG, CH-9469 Haag, Switzerland

Copyright © VAT Vakuumventile AG 2008

No part of these Instructions may be reproduced in any way (photocopies, microfilms or any other reproduction processes) nor may it be manipulated with electronic systems, duplicated or distributed without written permission from VAT. Offenders are liable to pay damages.

The original VAT firmware and updated state of the art versions of the VAT firmware are intended for use with VAT products. The VAT firmware contains a limited, time unlimited user license. The VAT firmware may not be used for purposes other than those intended nor is it permitted to make copies of the VAT firmware. In particular, it is strictly forbidden to give copies of the VAT firmware to other people.

The use of trade names, brand names, trademarks, etc. in these Instructions does not entitle third parties to consider these names to be unprotected and to use them freely. This is in accordance with the meaning of the laws and acts covering brand names and trademarks.

Technical data

Pressure range	extreme UHV to 2 bar (abs)
Differential pressure on the gate	1 bar in either direction
Max. differential pressure at opening	500 mbar, 1 bar with reduced cycle life
Admissible temperature: Valve	≤ 300°C open and closed
Manual actuator	≤ 140°C (option 200°C)
Position indicator (option)	≤ 80°C or 200°C
Position indicator: Contact rating	≤ 50 V AC / DC; ≤ 1.2 A (80°C version) ≤ 50 V AC / DC; ≤ 1 A (200°C version)

Further data according to VAT catalogue «Vacuum Valves 2008».

Electrical connection (valves with position indicators)

Do not touch any electrically charged parts!

Electrical power may only be connected if
- valve has been installed into the vacuum system

The suitable sockets are supplied with the valve.

Wiring has to be performed according to the following diagrams:

Position indicators for max. 80°C — contact rating ≤ 50 V AC / DC; ≤ 1.2 A (80°C version)

Standard position indicator with make contact switch 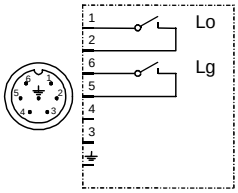 Lo = position indicator «open» Lg = position indicator «closed»	Double position indicator with make contact switches - two each (option) 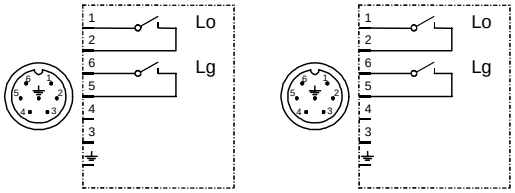 Lo = position indicator «open» Lg = position indicator «closed»
Position indicator with double throw switches (option) 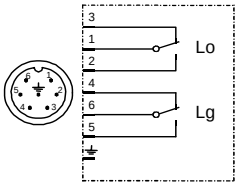 Lo = position indicator «open» Lg = position indicator «closed»	Double position indicator with double throw switches - two each (option) 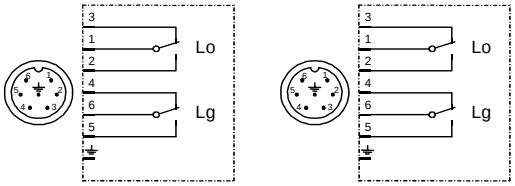 Lo = position indicator «open» Lg = position indicator «closed»

Position indicators for max. 200°C — contact rating ≤ 50 V AC / DC; ≤ 1 A (200°C version)

Single position indicator (option) 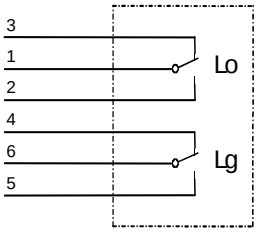 Lo = position indicator «open» Lg = position indicator «closed»	Double position indicator (option) 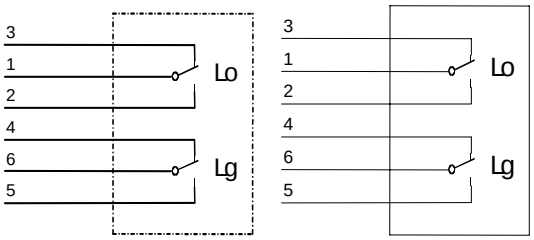 Lo = position indicator «open» Lg = position indicator «closed»

Admissible forces

The valve must not support other components and has to be protected from forces of the system (e.g. by bellows sections).

Bake-out

Valve:	≤ 300°C in open and closed position
Actuator:	≤ 140°C (option 200°C)
Position indicator (option):	≤ 80°C or ≤ 200°C
Heating and cooling rate:	DN 63 - 160: 50°C/h DN 200: 25°C/h

Operate the valve only after the bake-out temperature has been stable for two hours. If actuation during bake-out is required, the heating and cooling rate from 100°C to 300°C must not exceed 10°C/h.

Temperature differences exceeding 30°C throughout the valve are not allowed. They may affect the performance of the valve.

Trouble shooting

Whistling sound during opening/closing: When operating at atmosphere (not recommended):
No reason for concern

When operating at vacuum:
No reason for concern unless the sound gets extensive

Repairs

Contact VAT for repairs or maintenance. The fabrication No. (F48 **. . . - . . . . - . . . . / . . . .**) marked on the valve body has always to be specified. It has to be individually decided whether the work can be performed by the customer or has to be carried out by VAT.

All supplies (e.g. electrical power) has to be disconnected for removal/installation of the valve from/into the system.

Keep fingers and objects away from the valve opening!

Products returned to VAT for repair have to be free of harmful substances such as e.g. toxical, caustic or microbiological ones. For radioactively contaminated products the customer has to fill in the VAT form «Contamination and Radiation Report» and to send it with the product. The form is available at VAT. The maximum permissible values indicated in the form must not be exceeded.

Spare parts

The item numbers refer to the drawing on the following page.

Item	Description	Qty	Part / Ordering number			
			DN 63	DN 100	DN 160	DN 200
21/25	Treated hexagon socket head cap screw	10	N-5019-817	N-5019-818		
		14			N-5019-818	
		16				N-5019-819
	required torque of bonnet screw		18 Nm	20 Nm	18 Nm	22 Nm
36/1	VATRING	1	39615-01	39986-01	35774-01	48637-01
36/2	VATSEAL	1	80002-01	77130-01	83889-01	220679
	Vacuum seal kit, consisting of VATRING (36/1) and VATSEAL (36/2)		D-48136-.... (80989-R1)	D-48140-.... (81458-R1)	D-48144-.... (83884-R1)	D-48146-.... (99055-R1)

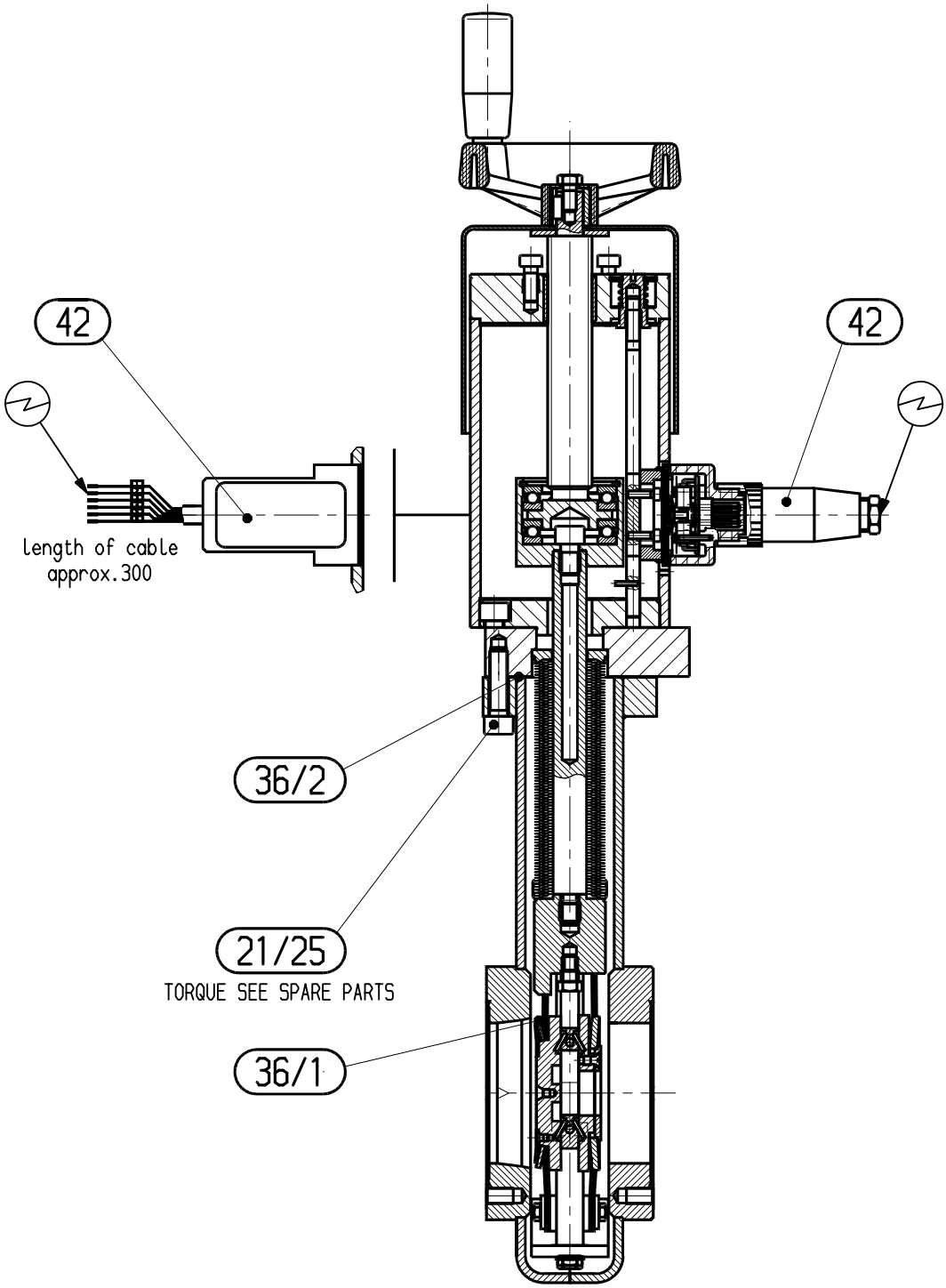
42
42
length of cable
approx.300
36/2
21/25
TORQUE SEE SPARE PARTS
36/1

Position indicators 80°C (single + double) in various versions with adapter

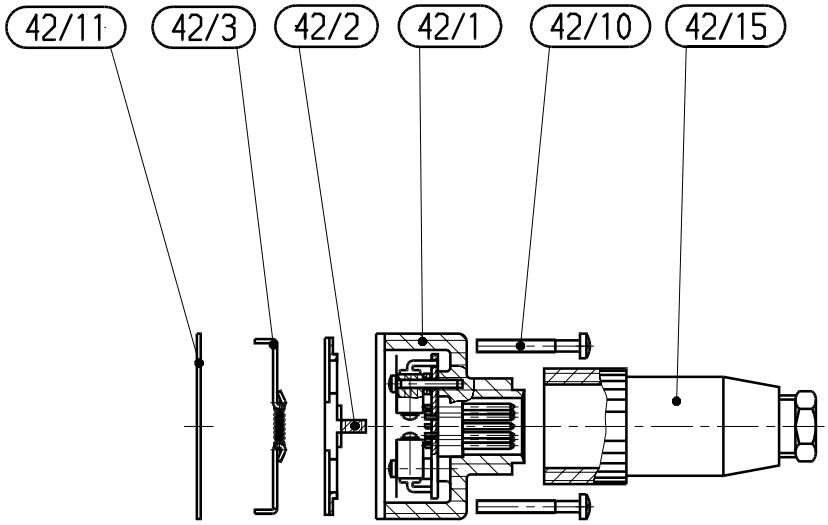

Item	Description	Version	Qty.		Part No.
			single	double	
42	BS Mini position indicator	make contact switches	1	2	204103
		double throw switches	1	2	204241
		make contact radiation resistant	1	2	204246
		double throw radiation resistant	1	2	204247
42/1	Position indicator	make contact switches	1	2	71852-R1
		double throw switches	1	2	70606-R1
		make contact radiation resistant	1	2	80075-R1
		double throw radiation resistant	1	2	83954-R1
42/2	Slider		1	2	69846-01
42/3	„Mitnehmer“		1	2	69428-R1
42/10	Screw		4	8	N-6016-478
42/11	Plate		1	2	74803-01
42/15	Socket		1	2	N-8504-002

Position indicators 200°C (single + double) with adapter

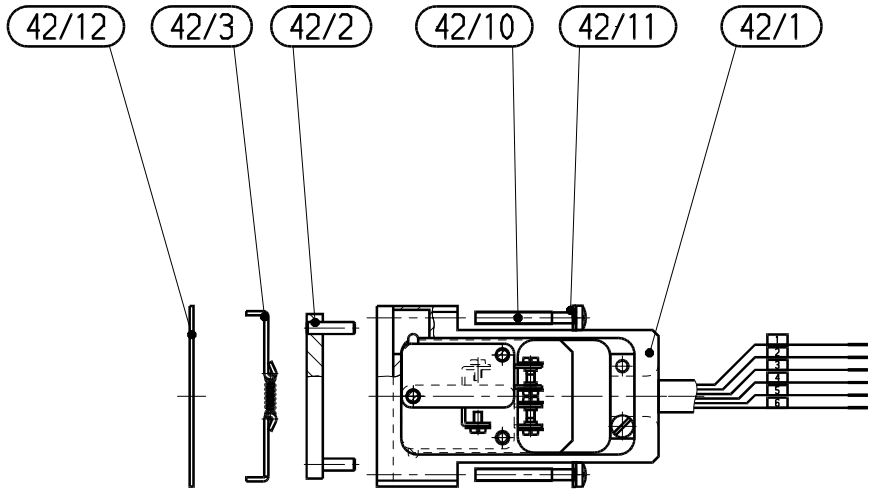

Item	Description	Version	Qty.		Part No.
			single	double	
42	BS Mini position indicator	double throw switches	1	2	204248
42/1	Position indicator		1	2	69664-R1
42/2	Slider		1	2	70279-R1
42/3	„Mitnehmer“		1	2	69428-R1
42/10	Screw		4	8	N-6016-478
42/11	Spring ring		4	8	N-6160-406
42/12	Plate		1	2	74803-01

Warranty

Each product sold by VAT Vakuumventile AG (VAT) is warranted to be free from the manufacturing defects that adversely affect the normal functioning thereof during the one-year period immediately following delivery thereof by VAT, provided that the same is properly operated under conditions of normal use and that regular, periodic maintenance and service is performed or replacements made, in accordance with the instructions provided by VAT. The foregoing warranty shall not apply to any product or component that has been repaired or altered by anyone other than an authorized VAT representative or that has been subject to improper installation or abuse, misuse, negligence or accident. VAT shall not be liable for any damage, loss, or expense, whether consequential, special, incidental, direct or otherwise, caused by, arising out of or connected with the manufacture, delivery (including any delay in or failure to deliver), packaging, storage or use of any product sold or delivered by VAT shall fail to conform to the foregoing warranty or to the description thereof contained herein, the purchaser thereof, as its exclusive remedy, shall upon prompt notice to VAT of any such defect or failure and upon the return of the product, part or component in question to VAT at its factory, with transportation charges prepaid, and upon VAT's inspection confirming the existence of any defect inconsistent with said warranty or any such failure, be entitled to have such defect or failure cured at VAT's factory and at no charge therefor, by replacement or repair of said product, as VAT may elect. VAT MAKES NO WARRANTY OR REPRESENTATION OF ANY KIND, EXPRESS OR IMPLIED, (INCLUDING NO WARRANTY OR MERCHANTABILITY), EXCEPT FOR THE FOREGOING WARRANTY AND THE WARRANTY THAT EACH PRODUCT SHALL CONFORM TO THE DESCRIPTION THEREOF CONTAINED HEREIN, and no warranty shall be implied by law.

Furthermore, the «Terms of sale» at the back of the price list are applicable.