This drawing is the property of VAT.

Revision

Customer number

A (10:1)

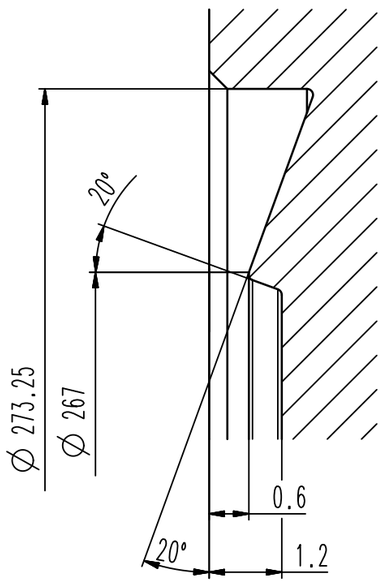

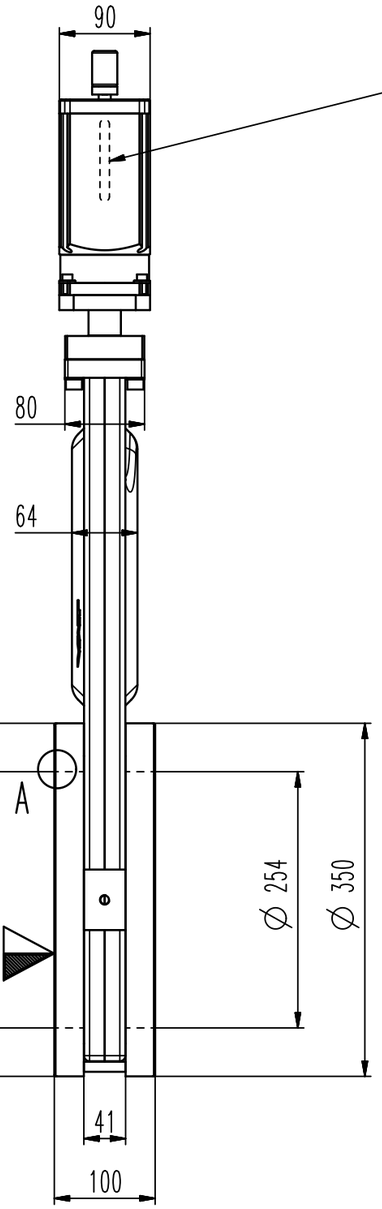

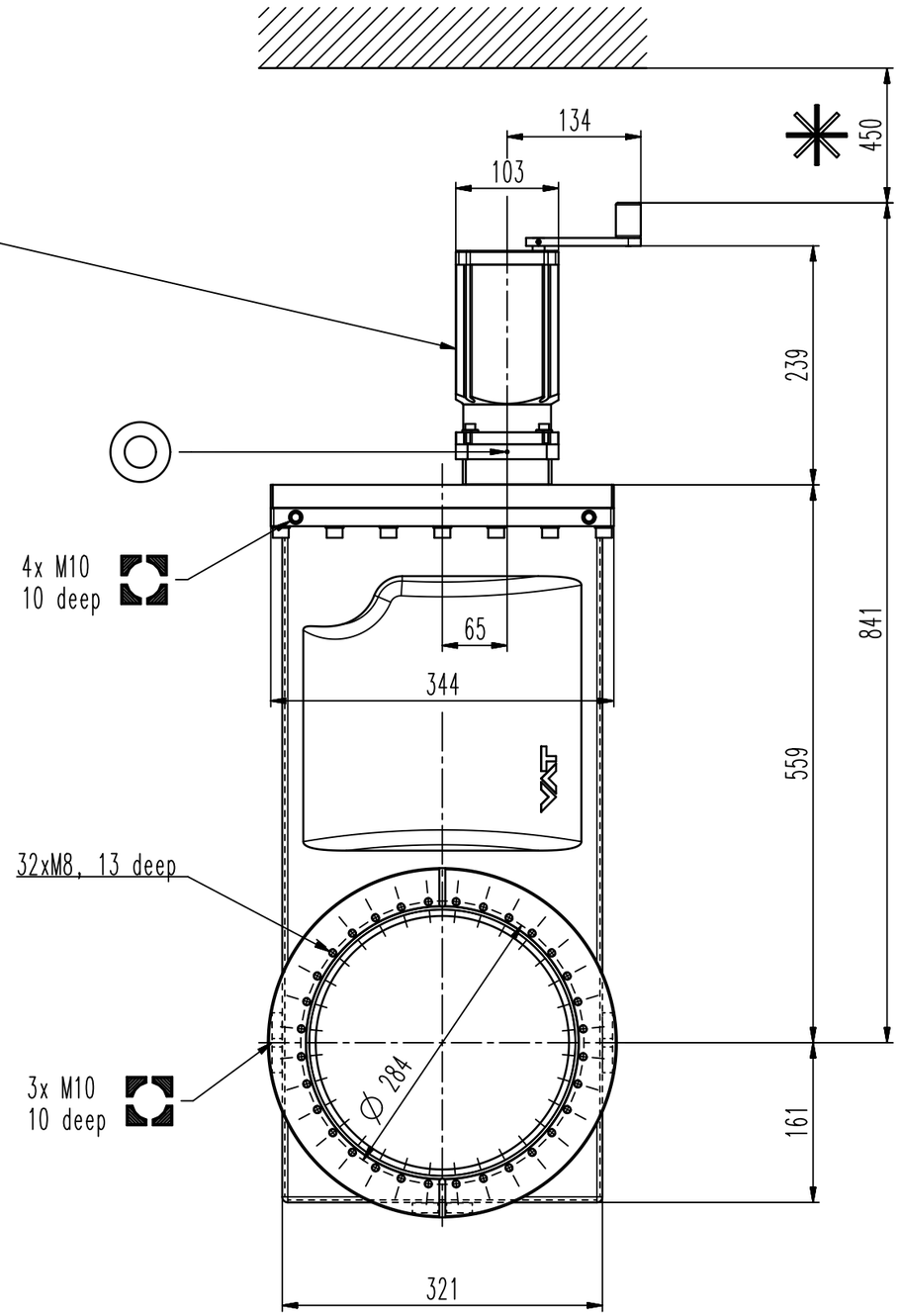

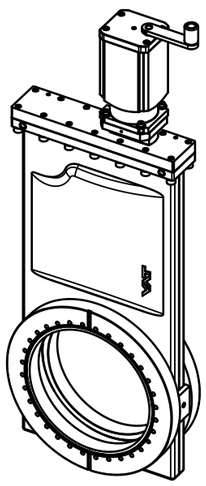

- Seat side
- Comp. air connection
- Electrical connection
- Leak detection port
- Mech. pos. indication
- Position indicator
- Required for dismantling
- Emergency actuation
- For attachment
- Bake-out area
- Differential pumping port

UHV gate valve

Series	Ordering No.
108	10848-CE01-0008
Projection E	DN / Flange
	250 CF-F m

VAT Vakuumventile AG
CH-9469 Haag , Switzerland
Tel ++41 81 7716161 Fax ++41 81 7714830

Date: 27.08.99
Name: SUP

Dimensional Drawing

207917

Rev. A

user Ideasadm at 28.06.2011, 11:33:48

VATMDA