This drawing is the property of VAT.
Without the written consent of VAT , it must
not be copied or distributed to a third person

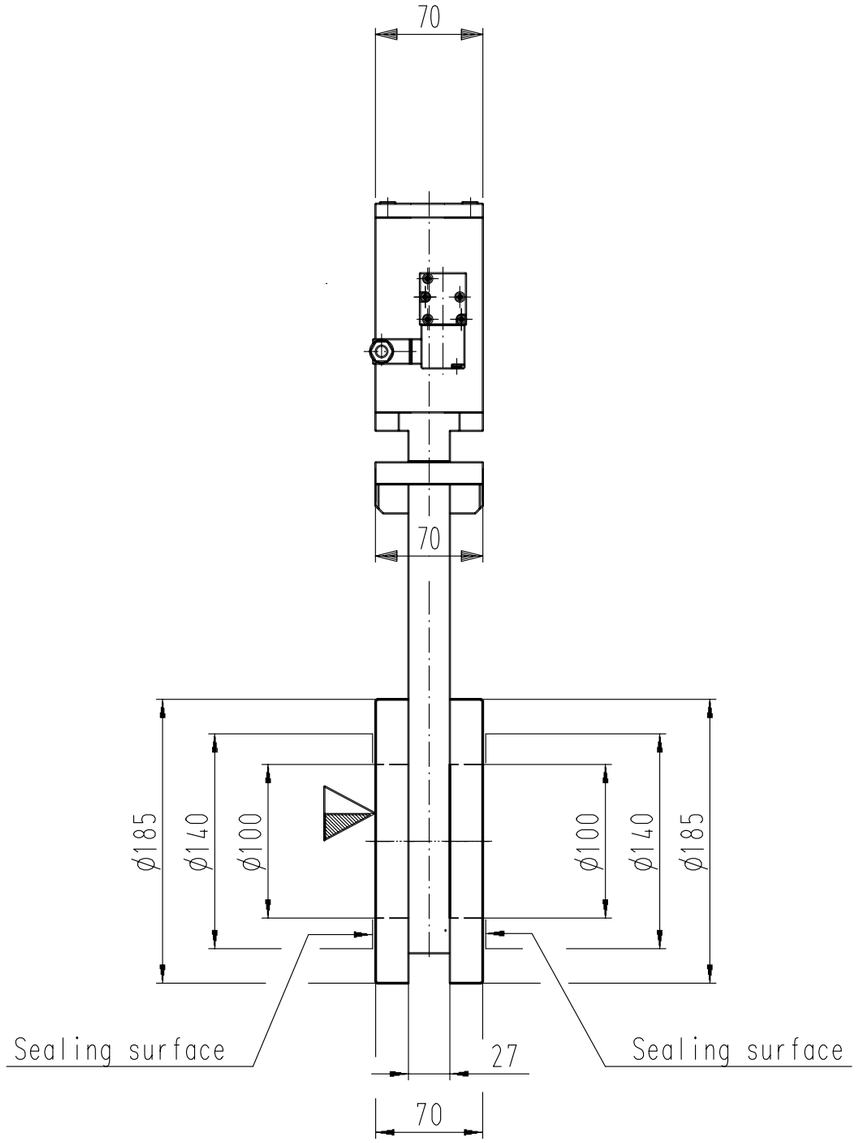

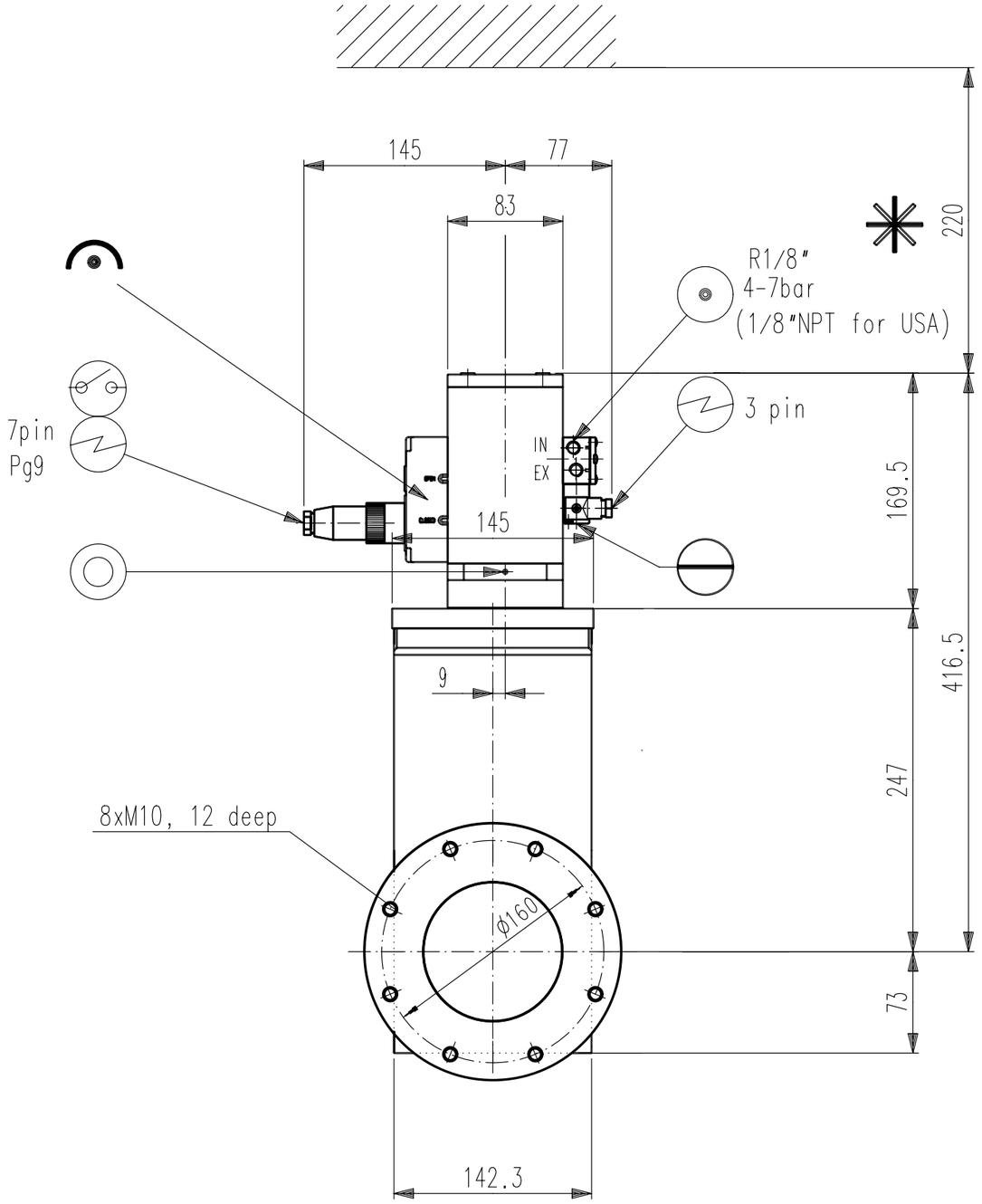

- Seat side
- Comp. air connection
- Electrical connection
- Leak detection port
- Mech. pos. indication
- Position indicator
- Required for dismantling
- Emergency actuation
- For attachment
- Bake-out area

UHV Gate Valve

pneumatic actuator

Series	Ordering No.
10	10840-JE44

Projection E

DN	Flange
100	JIS

VAT Vakuumventile AG
CH-9469 Haag , Switzerland
Tel ++41 81 7716161 Fax ++41 81 7714830

Date: 30.08.2000
Name: SUTER

Dimensional Drawing

215253

Rev.

Revision	Code	Date	Name

MB VATMDA