This drawing is the property of VAT.

Revision

Customer number

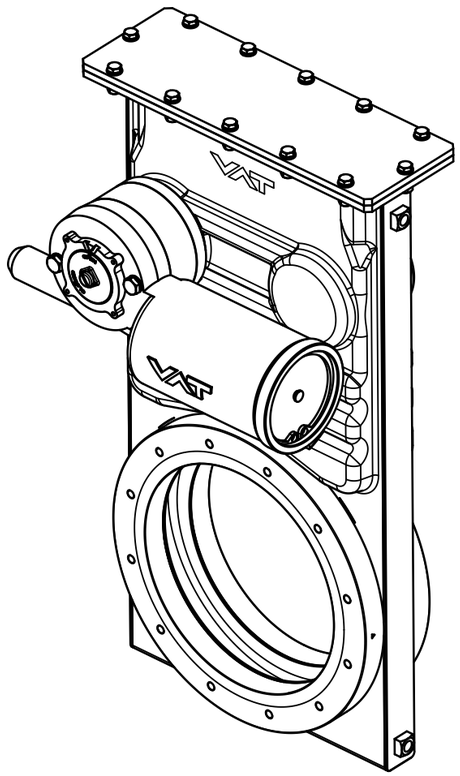

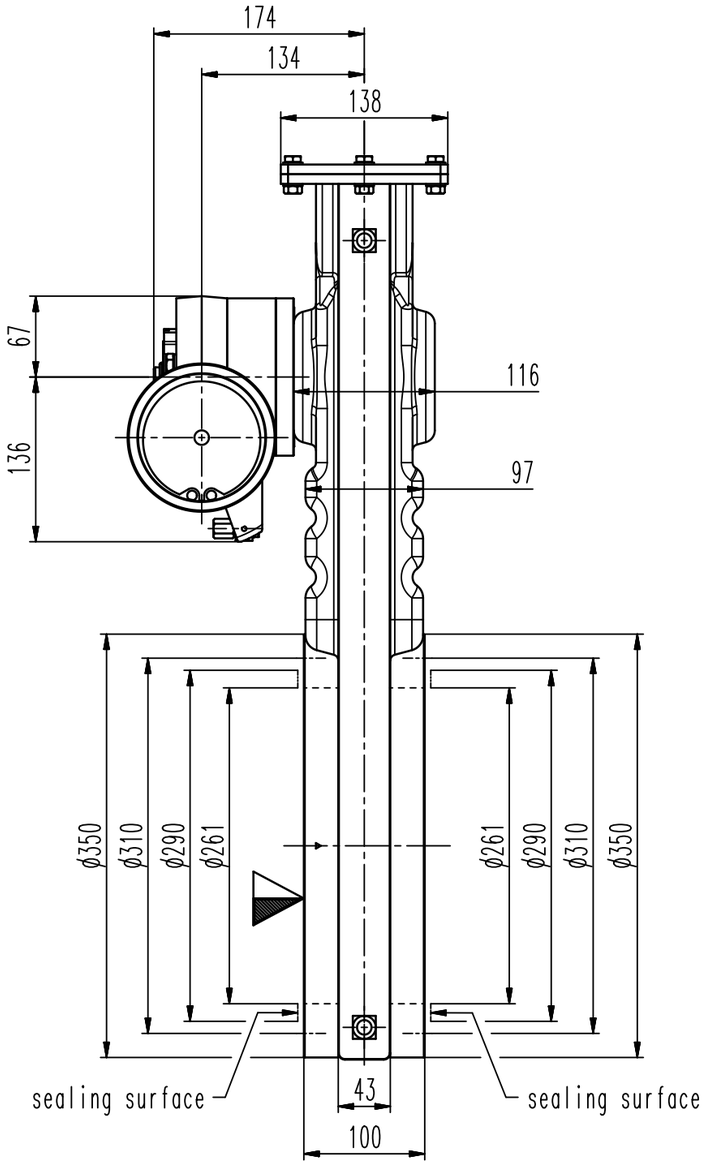


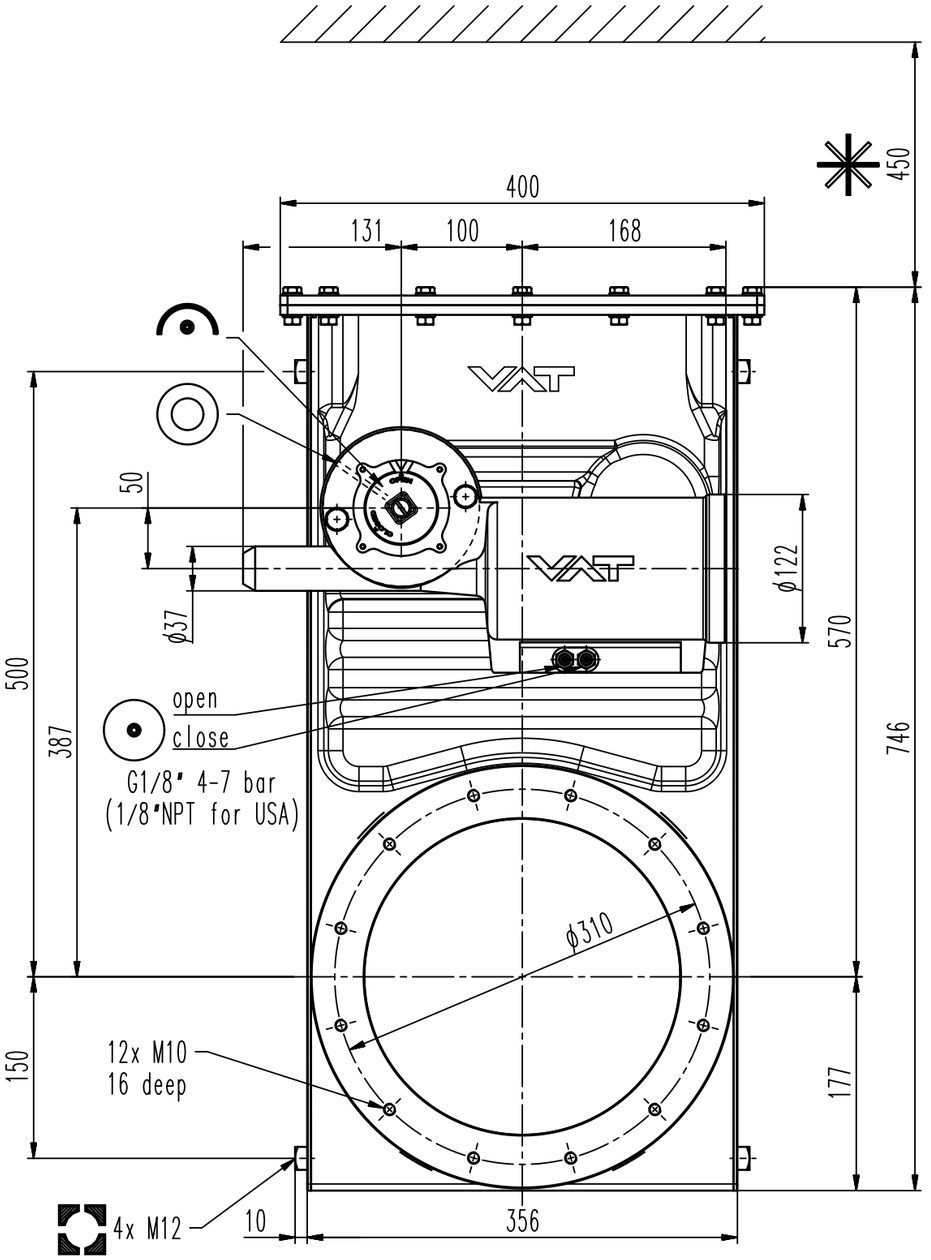


- Seat side
- Comp. air connection
- Electrical connection
- Leak detection port
- Mech. pos. indication
- Position indicator
- Required for dismantling
- Emergency actuation
- For attachment
- Bake-out area
- Differential pumping port

# HV gate valve

| | |
|---|---|
| Series | 140 |
| Ordering No. | 14048-PE14-0006 |
| Projection E | |
| DN | 250 |
| Flange | ISO-F |
| Dimensional Drawing | |
| Rev. | A |

VAT Vakuumventile AG
CH-9469 Haag , Switzerland
Tel ++41 81 7716161 Fax ++41 81 7714830

Rev.-Date: 30.09.13
Visa: MAEM

236499