This drawing is the property of VAT.
Without the written consent of VAT , it must
not be copied or distributed to a third person

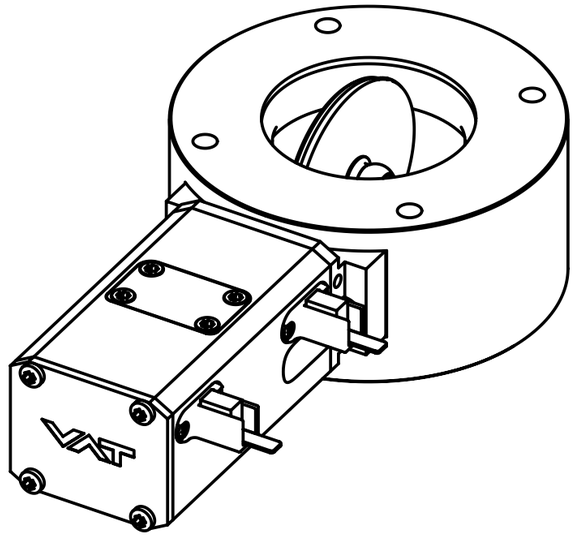

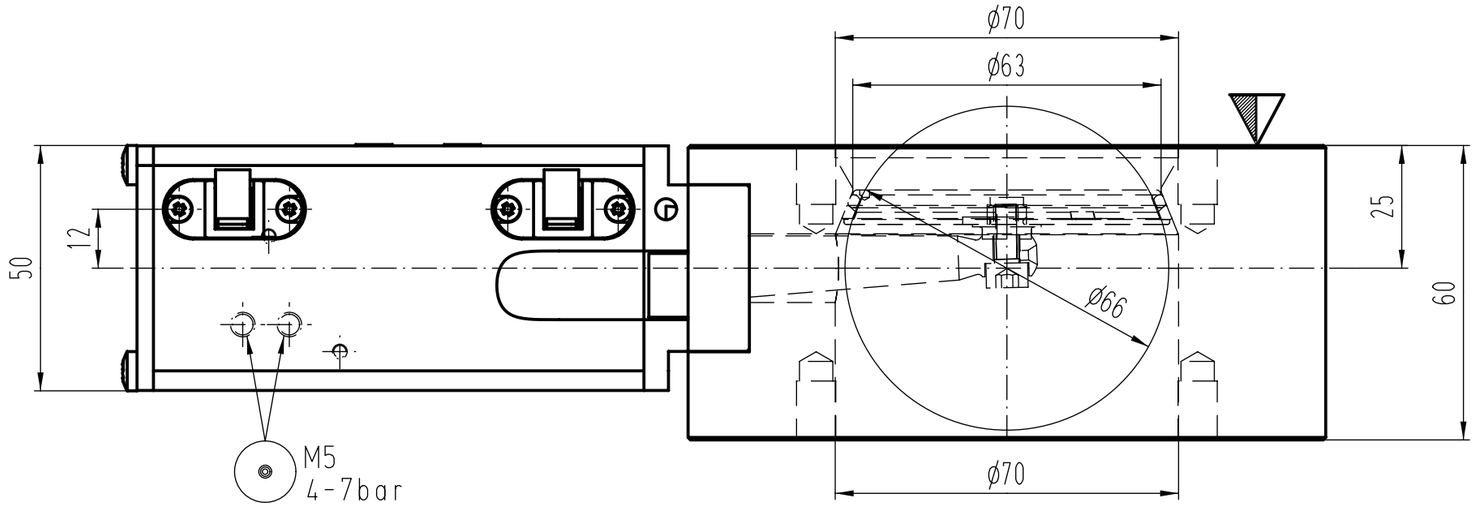

A-A

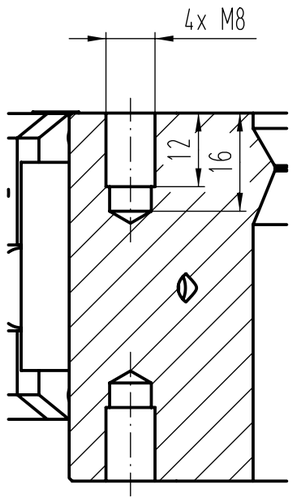

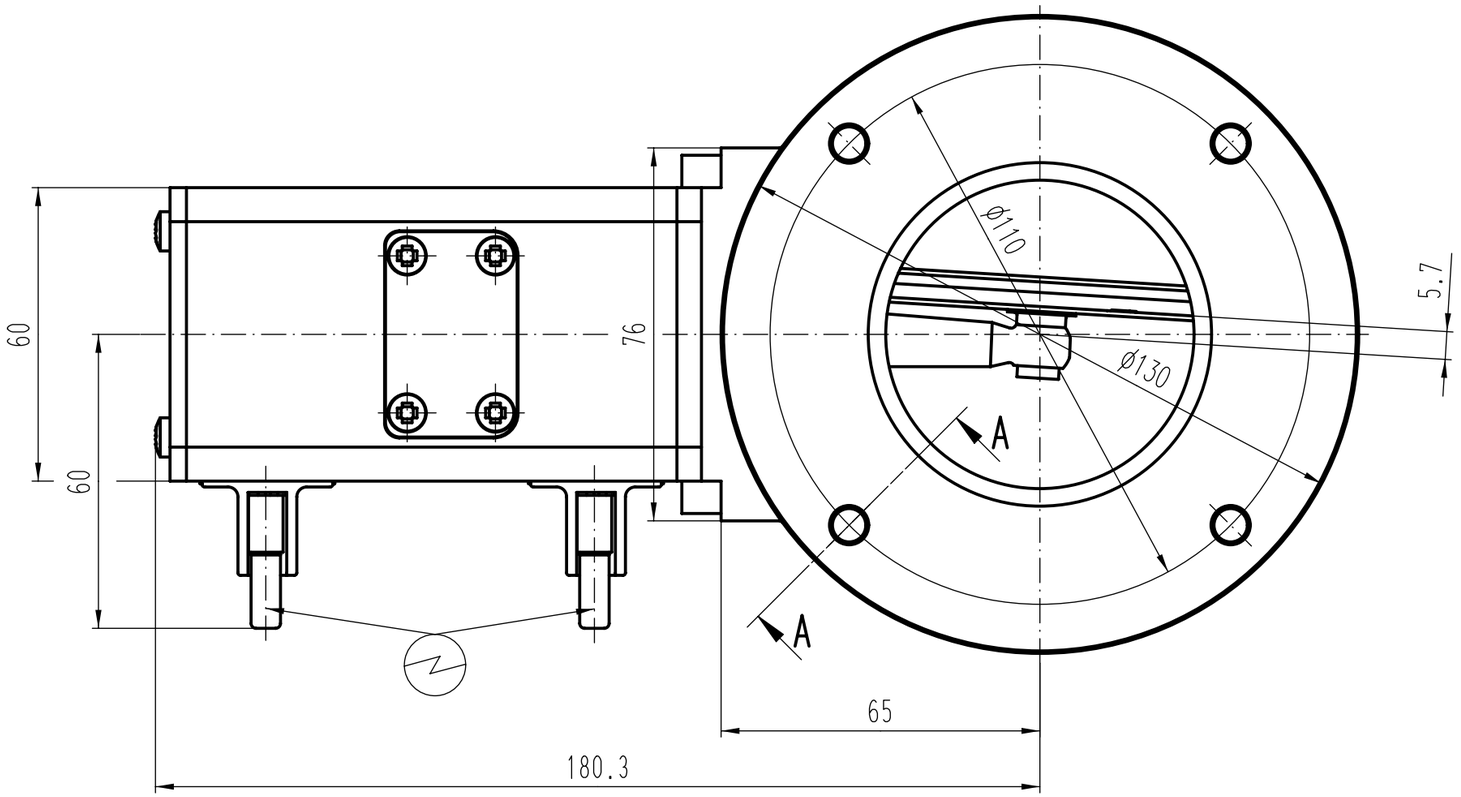

Revision	Code	Date	Name

- Seat side
- Comp. air connection
- Electrical connection
- Leak detection port
- Mech. pos. indication
- Position indicator
- Required for dismantling
- Emergency actuation
- For attachment
- Bake-out area
- Differential pumping port

Vatterfly Valve

pneumatic actuator

Series	Ordering No.
204	20436-PE24

Projection E

DN	Flange
63	ISO-F

VAT Vakuumventile AG
CH-9469 Haag , Switzerland
Tel ++41 81 7716161 Fax ++41 81 7714830

Date: 25.11.03
Name: KIM

Dimensional Drawing

245052

Rev.