This drawing is the property of VAT.

Revision

Customer number

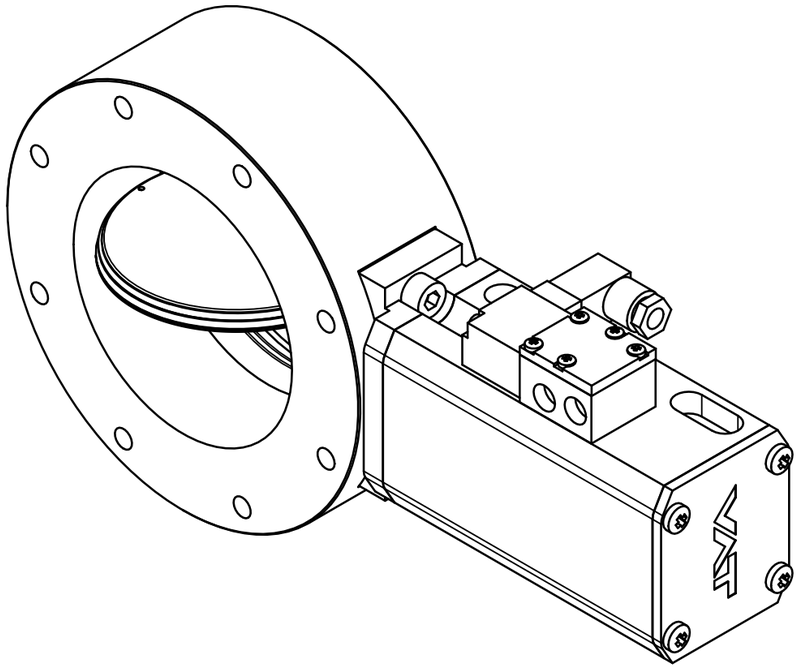

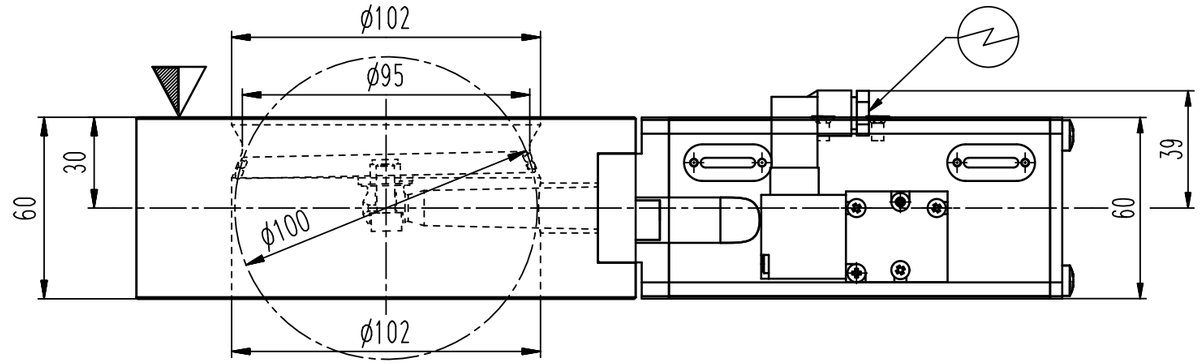

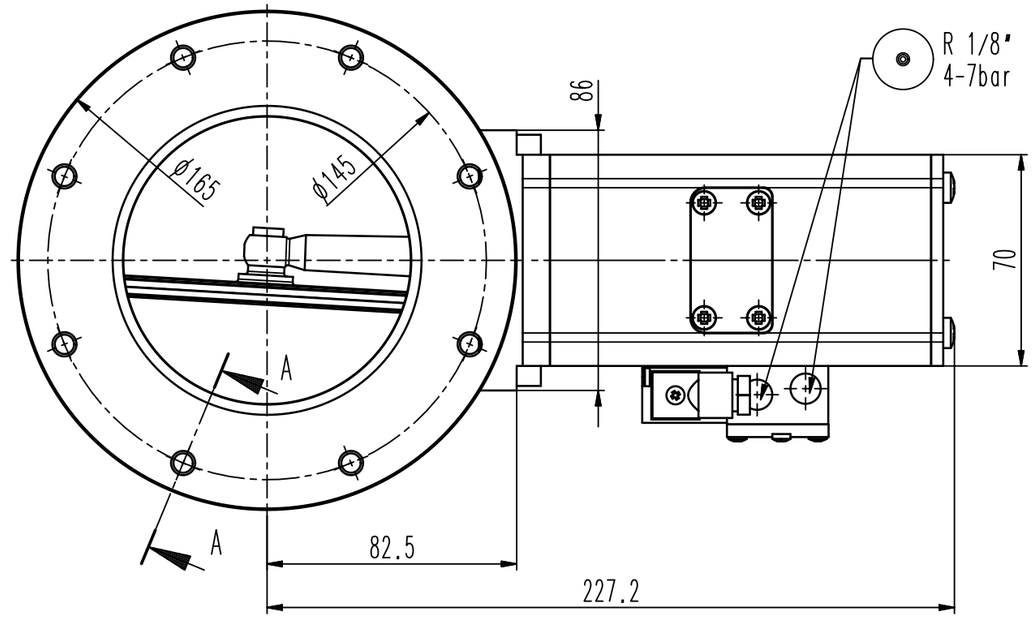

A-A

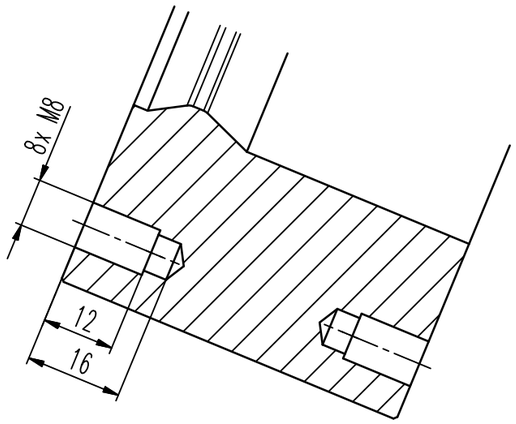

- Seat side
- Comp. air connection
- Electrical connection
- Leak detection port
- Mech. pos. indication
- Position indicator
- Required for dismantling
- Emergency actuation
- For attachment
- Bake-out area
- Differential pumping port

Vatterfly valve

VAT Vakuumventile AG
CH-9469 Haag , Switzerland
Tel ++41 81 7716161 Fax ++41 81 7714830

Date: 03.06.08
Name: KIM

Series	Ordering No.
203	20340-PE34-0002
Projection E	DN / Flange
	100 / ISO-F
Dimensional Drawing	373774

Rev.