This drawing is the property of VAT.

Revision

Customer number

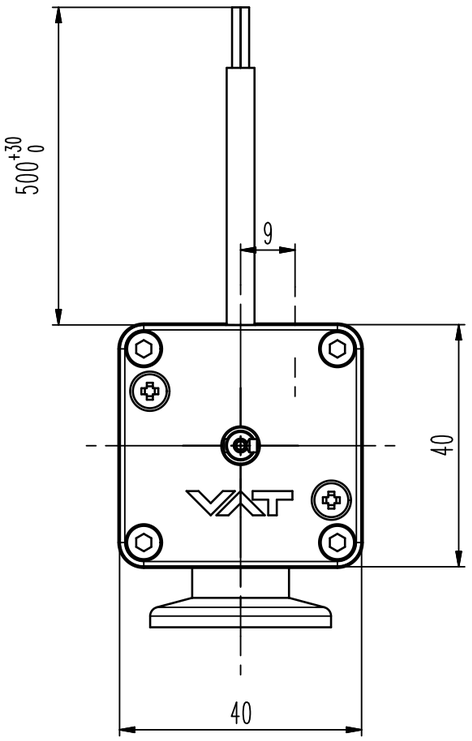

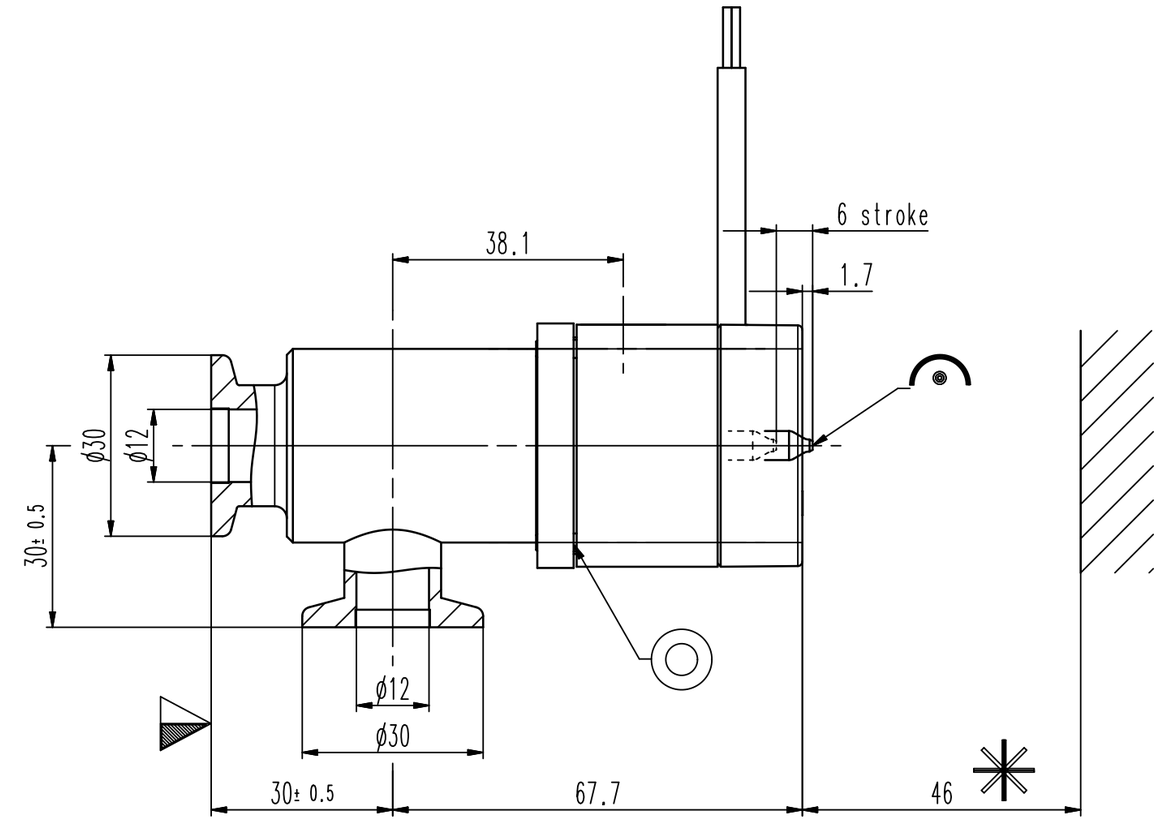

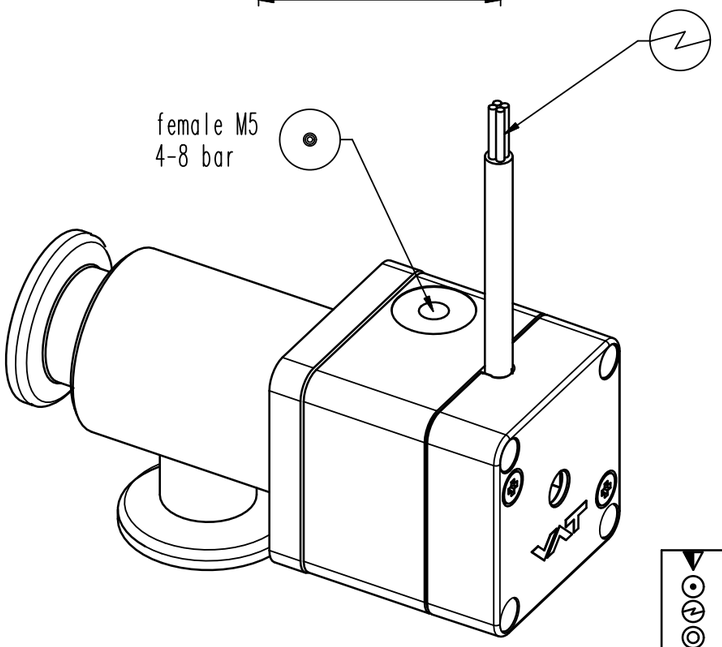

- Seat side
- Comp. air connection
- Electrical connection
- Leak detection port
- Mech. pos. indication
- Position indicator
- Required for dismantling
- Emergency actuation
- For attachment
- Bake-out area
- Differential pumping port

Vacuum angle valve

Series	Ordering No.
244	24420-KE21-0001

Projection E	DN	Flange
	10	ISO-KF

VAT Vakuumventile AG
CH-9469 Haag , Switzerland
Tel ++41 81 7716161 Fax ++41 81 7714830

Date: 25.09.08
Name: EMI

Dimensional Drawing

384158

Rev.