This drawing is the property of VAT.

Revision

Customer number

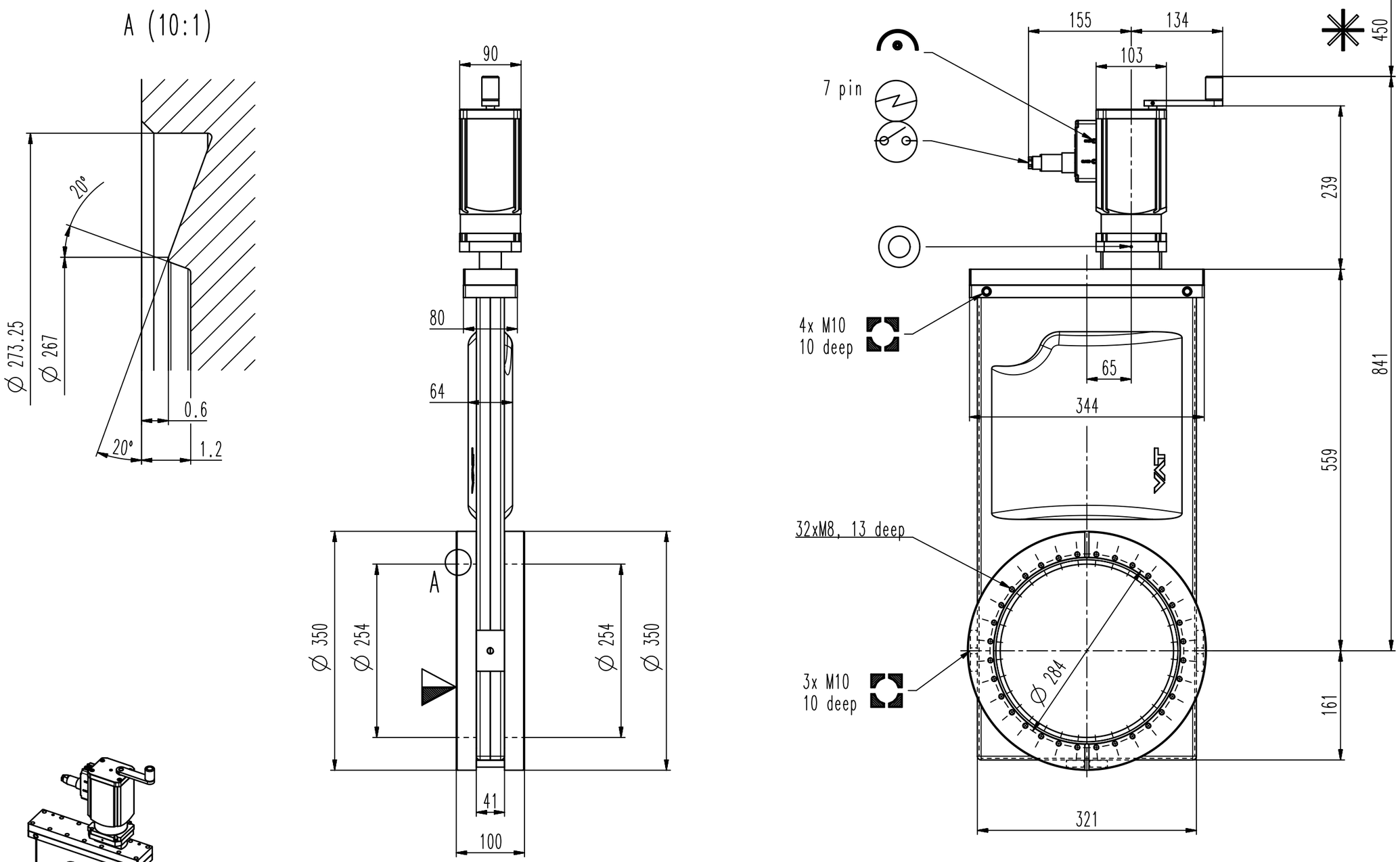

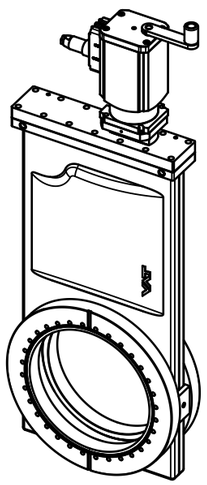

- Seat side
- Comp. air connection
- Electrical connection
- Leak detection port
- Mech. pos. indication
- Position indicator
- Required for dismantling
- Emergency actuation
- For attachment
- Bake-out area
- Differential pumping port

UHV gate valve

Series	Ordering No.
108	10848-CE08-0008

Projection E

DN	Flange
250	CF-F m

VAT Vakuumventile AG
CH-9469 Haag , Switzerland
Tel ++41 81 7716161 Fax ++41 81 7714830

Date: 30.06.11
Name: PEM

Dimensional Drawing

497815

Rev.