This drawing is the property of VAT.

Customer number

Revision

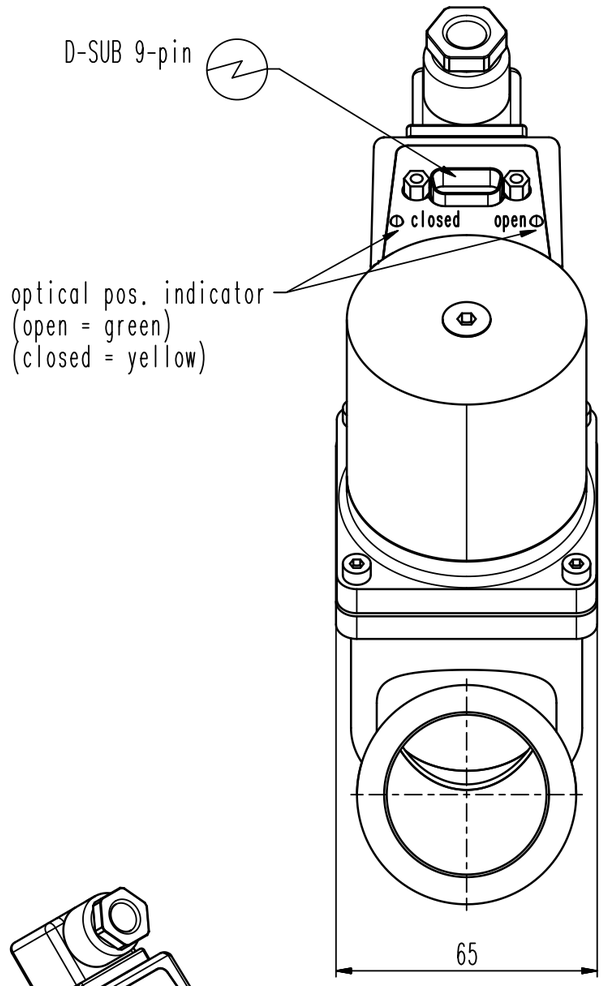

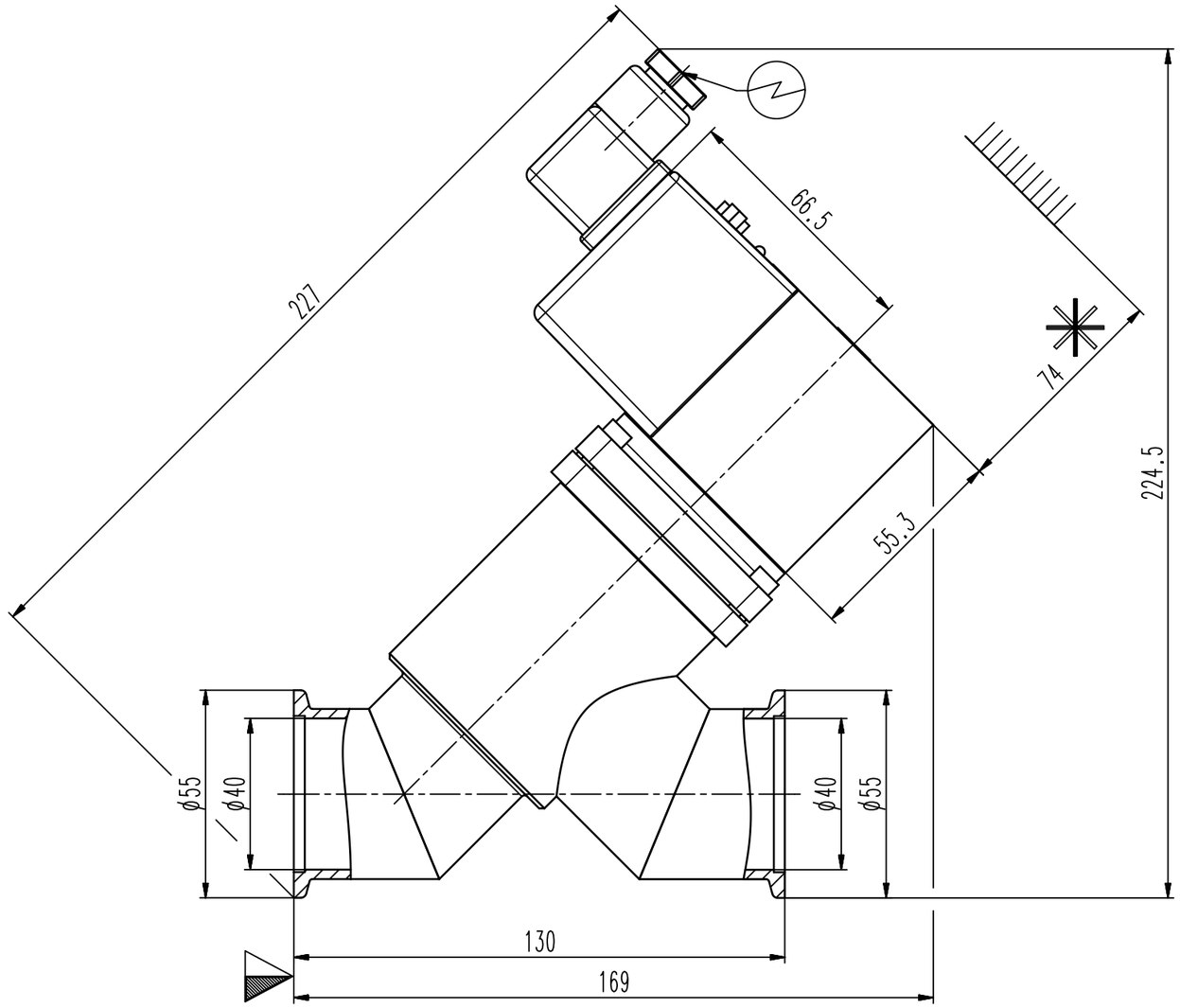

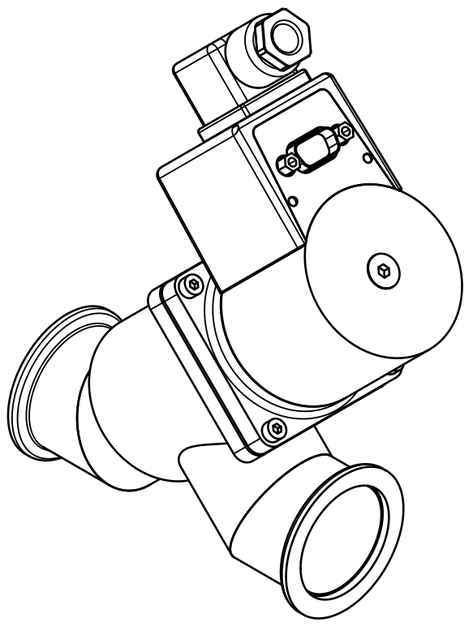

- Seat side
- Comp. air connection
- Electrical connection
- Leak detection port
- Mech. pos. indication
- Position indicator
- Required for dismantling
- Emergency actuation
- For attachment
- Bake-out area
- Differential pumping port

HV inline valve

Series	Ordering No.
265	26532-KE61-0002

Projection E

DN	Flange
40	ISO-KF

VAT Vakuumventile AG
CH-9469 Haag , Switzerland
Tel ++41 81 7716161 Fax ++41 81 7714830

Rev.-Date: 08.02.12
Visa: WARO

Dimensional Drawing

526521

Rev.